Walter Wiesmüller
for www.radiomuseum.org
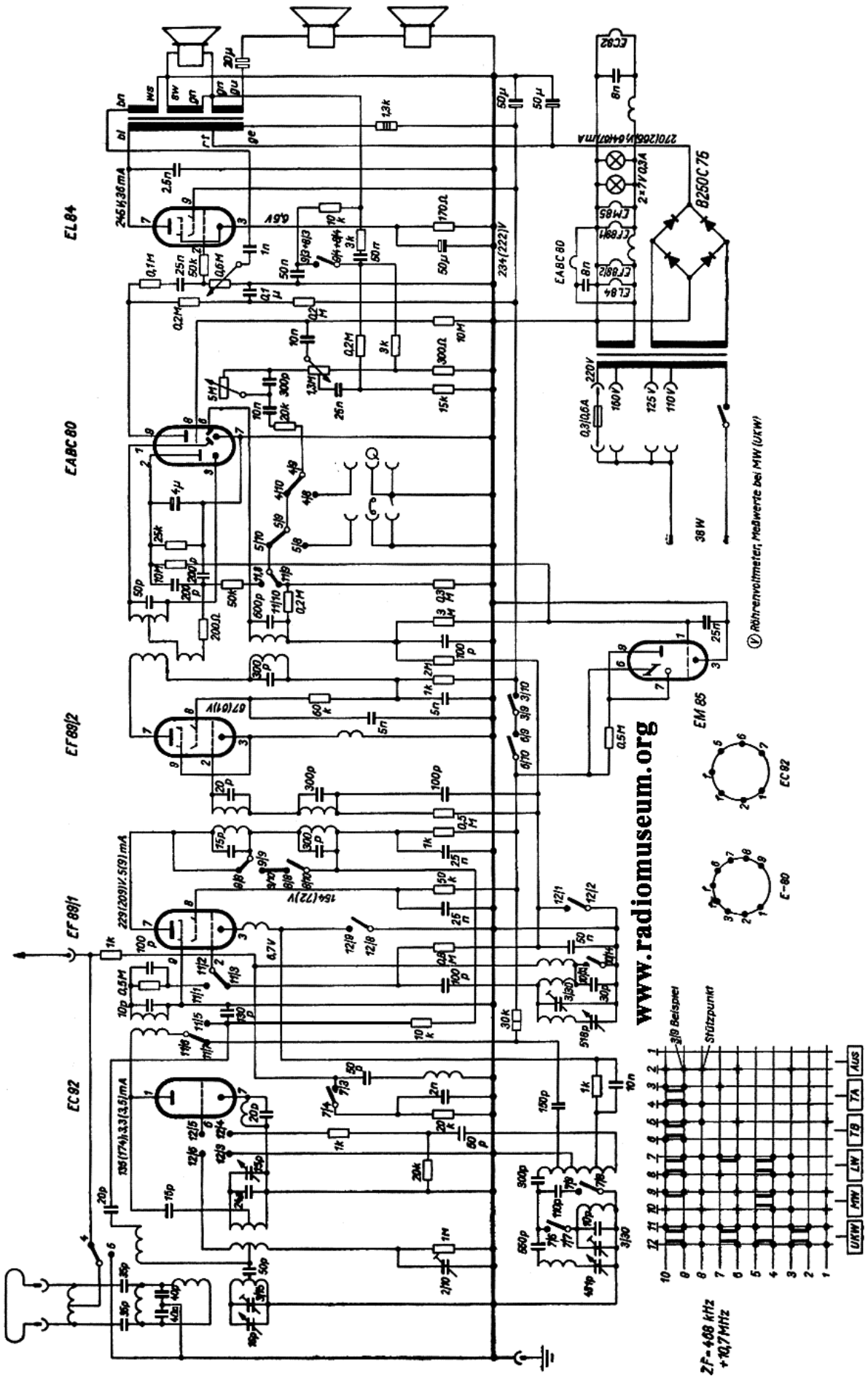
Grundig 2030 W/3D